ingun®

Test Probes · **Test Fixtures**

IN TESTING SOLUTIONS No.1 IN DER PRÜFTECHNIK

Test Fixture MA 21xx
New Products

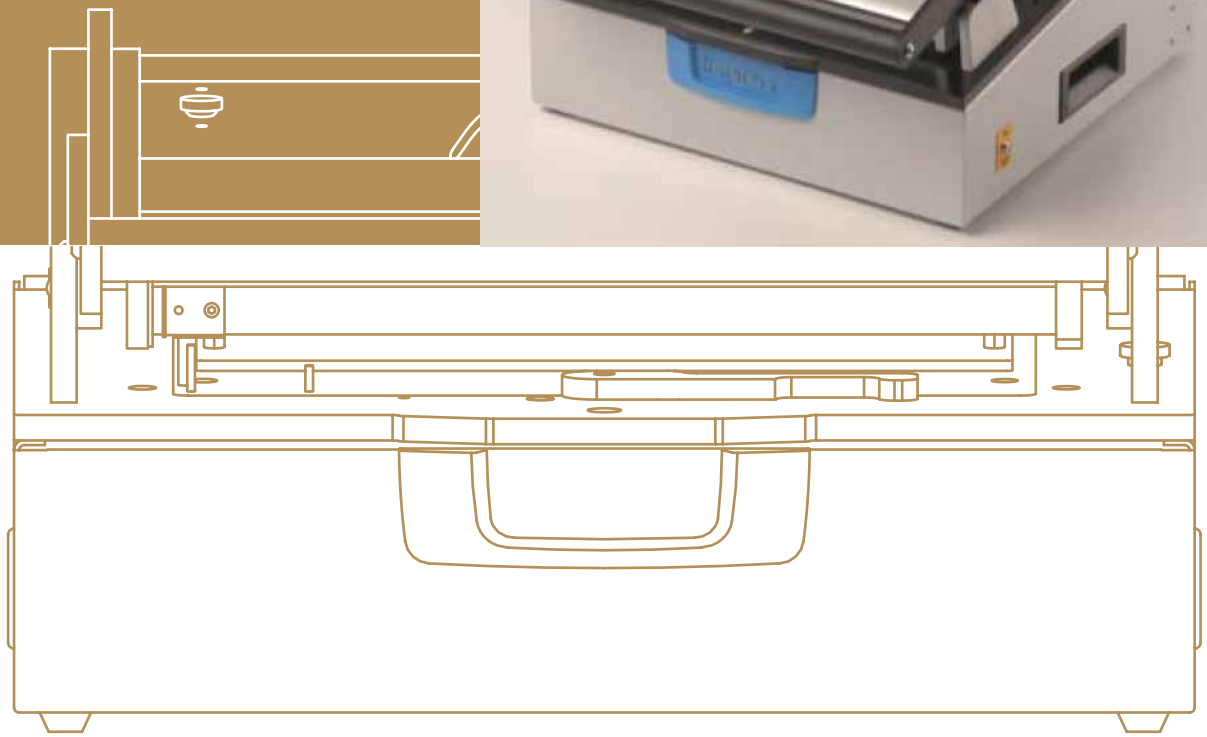

Manual Test Fixtures
MA 21xx

Extended choice for highest demands

The continuous and increasing demand from the market for our newly developed Manual Test Fixture series MA 21xx confirms our efforts to constantly offer our customers the best solution for your individual testing demands.

We meet these challenges sustainably in accordance to our motto „Quality through precision" by means of continuous further development and the extension of our product portfolio. Our customers benefit not only from market-driven solutions, but also especially from innovative and forward-looking technologies.

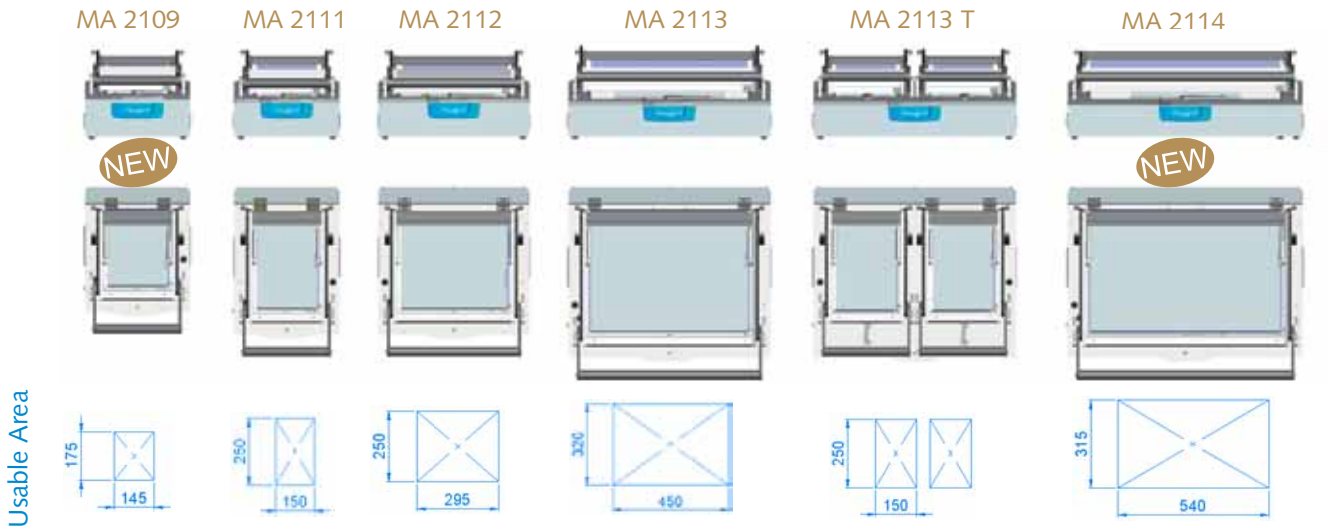

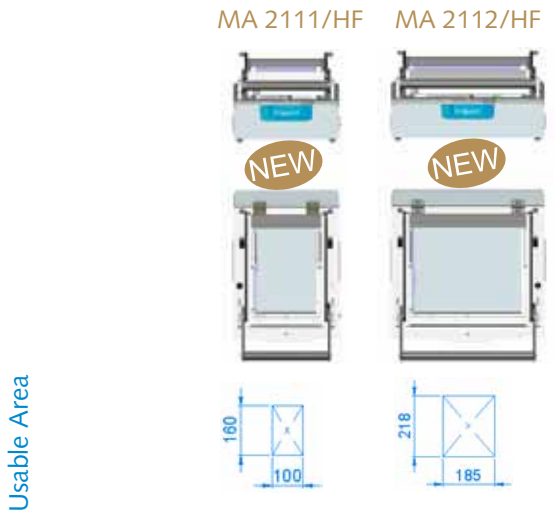

Outstanding Features:

- high contacting force up to 2000 N with strengthening bars
- guided parallel stroke of approx. 15 mm
- low-ohm Intermediate Interface for up to 1330 Test Probes each with 1.5N spring force
- large opening angle of the Pressure Frame (NDH) - approx. 80°
- effort-saving Mechanics due to self-opening Pressure Frame (NDH) greater approx. 50°
- free-moving, ball-bearing mounted drive-unit
- fast exchange of the interchangeable Replacement Kits without use of tools and without post adjustment
- Interchangeable Replacement Kits can be stacked for easy storage
- internally mounted Gas Struts
- ergonomic handle
- innovative locking bar
- extendable for double-sided contacting
- available for all common Test Systems
- comprehensive assortment of optional, additional components available

All specifications are subject to change without prior notification

Manual Test Fixtures MA 21xx

Manual Test Fixtures MA 2109 and MA 2114

Apart from the renowned and well-established Manual Test Fixtures MA 2111, MA 2112, MA 2113 and MA 2113 T we are now introducing also the series **MA 2109** and **MA 2114**. When equipped with strengthening bars the Manual Test Fixtures achieve a contacting force of up to 2000 N.

They differ by means of the increasing outside dimensions and the various maximum usable areas. With this the Manual Test Fixture series MA 2109 has the smallest and the series MA 2114 the largest outside dimensions and usable area.

Manual Test Fixture MA 2109

MA 2109/D/H/S-5
- Part No.: 34340
- Outside Dim.: 320 x 445 x 270 mm
- Contact Force: up to 2000 N

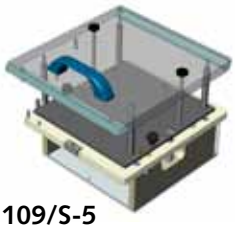

ATS 2109/S-5
- Part No.: 34140
- Usable Area: 145 x 175 mm
- Contact Blocks: up to 5 Pieces

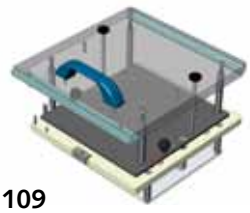

ATS 2109
- Part No.: 34270
- Outside Dim.: 145 x 175 mm
- Contact Blocks: 0

MA 2109/D/H/S-5 with ATS 2109/S-5

Manual Test Fixture MA 2114

MA 2114/D/H/S-10
- Part No.: 34350
- Outside Dim.: 720 x 585 x 270 mm
- Contact Force: up to 2000 N

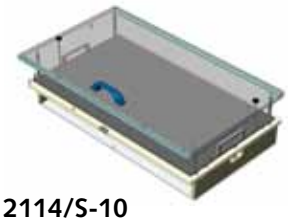

ATS 2114/S-10
- Part No.: 34490
- Usable Area: 540 x 315 mm
- Contact Blocks: up to 10 Pieces

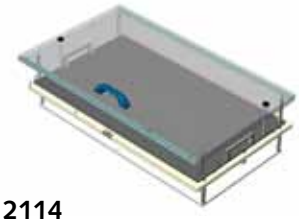

ATS 2114
- Part No.: 34345
- Outside Dim.: 540 x 315 mm
- Contact Blocks: 0

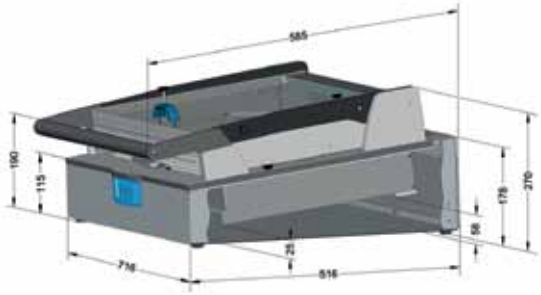

MA 2114/D/H/S-10 with ATS 2114/S-10

All specifications are subject to change without prior notification

RF Replacement Kits for the Manual Test Fixtures series MA 2111 and MA 2112

As an enhancement, we provide **RF Replacements Kits** for the highest demands, which were designed especially for the standardized series MA 2111 and MA 2112. As usual, also these RF Replacements Kits can be inserted into the matching Base Unit without the use of tools.

Contacting is carried out with INGUN RF Probes (HFS) or with INGUN High-current Probes (HSS). The guidance of the wiring connections from the RF Cover to the outside is carried out by means of ceramic feed-through capacitors and ferrite beads as well as co-axial wiring connections for RF signals. The design layout is done at INGUN.

RF Replacement Kit for MA 2111

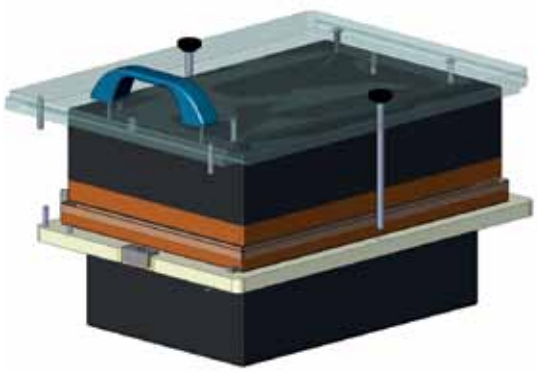

ATS 2111/HF
- Part No.: 33391
- Usable Area: 100 x 160 mm
- Contact Blocks: 0

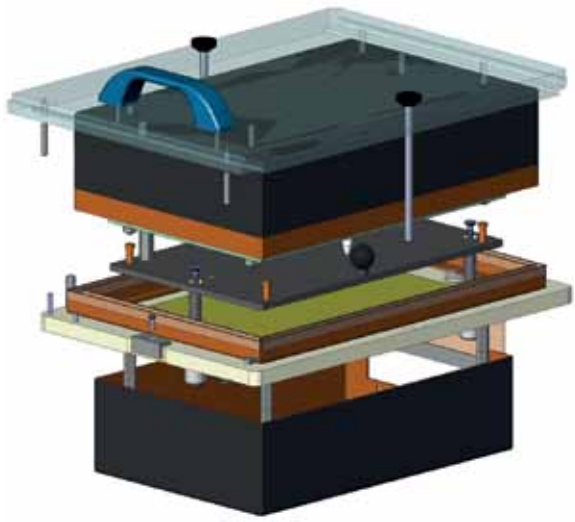

RF Replacement Kit for MA 2112

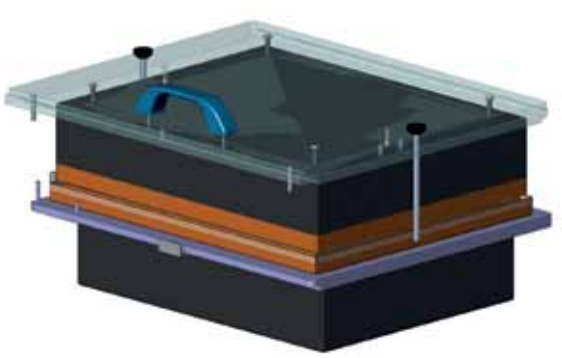

ATS 2112/HF
- Part No.: 33383
- Usable Area: 185 x 218 mm
- Contact Blocks: 0

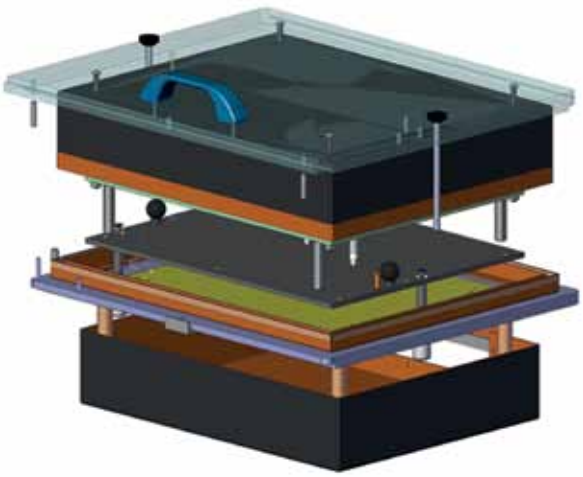

All specifications are subject to change without prior notification

Additional Components for the Manual Test Fixture series MA 21xx

Apart from this we offer our customers numerous additional standard and optional components for our Manual Test Fixture series MA 21xx. All additional components are designed in such a way that they can be mounted onto all sizes of the new MA 21xx series.

Ideally they are mounted during initial customizing, but then can also be mounted at a later time. Our customers benefit from the well-balanced system designs and an extended, individual functionality of their manual Test Fixture series MA 21xx.

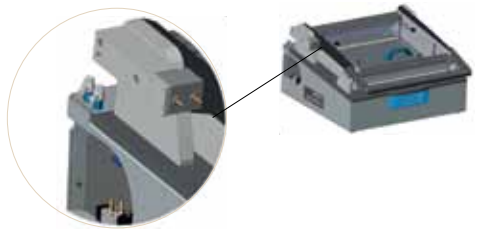

NDH (Pressure Frame) locking unit, pneumatic 6 bar
- Part No.: 31681

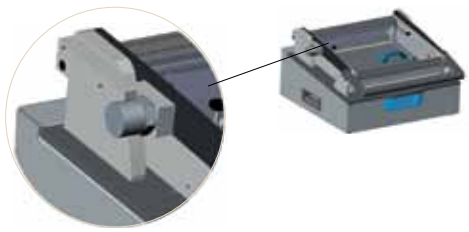

NDH locking unit, electrical 24 V NC
-Part No.: 32665

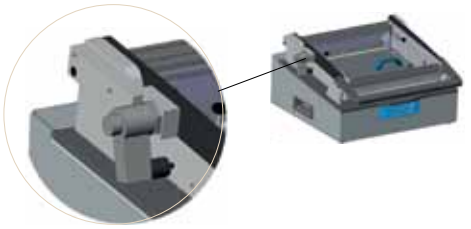

NDH locking unit, electrical 24 V NO
(Retro-set)
- Part No.: 36065

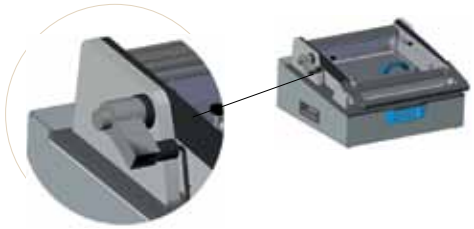

NDH locking unit, electrical 24 V NO
(Initial Assembly)
- Part No.: 33745

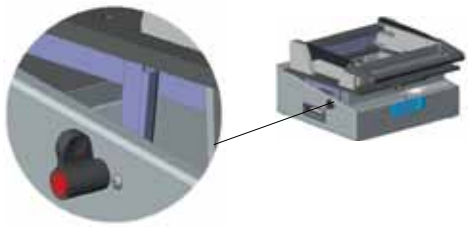

Anti-pinch Protection
- Part No.: 29805

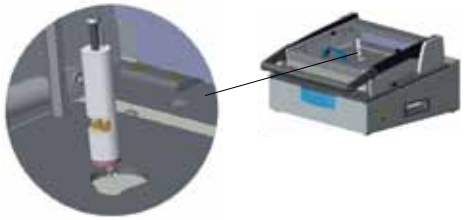

Check NDH closed on Replacement Kit (ATS) (2 spring-loaded Test Probes)
- Part No.: 33465

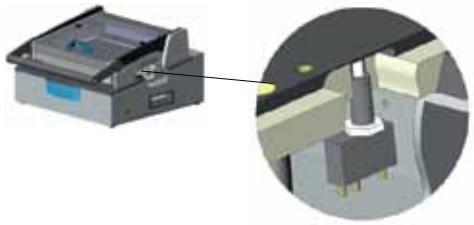

Check NDH closed on Replacement Kit (ATS) (Stroke Counter)
- Part No.: 33510

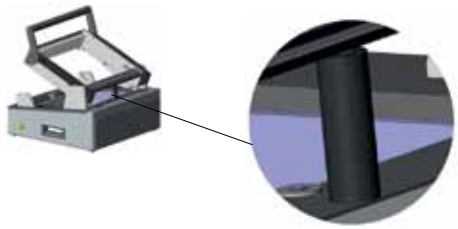

NDH Opening Limitation (approx. 60°)
- Part No.: 33436

All specifications are subject to change without prior notification

Manual Test Fixtures
MA 21xx

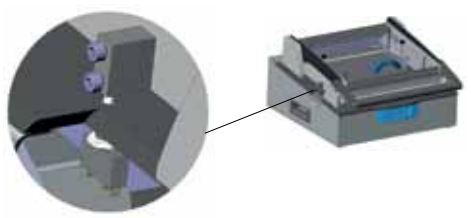

Check NDH closed on Base Unit
- Part No.: 33840

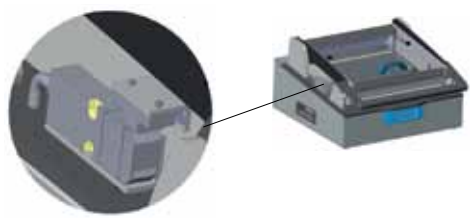

Safety Switch on NDH frame
- Part No.: 32745

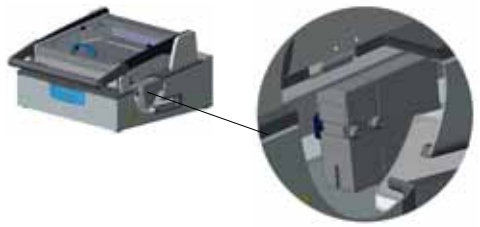

Safety Switch NO on NDH frame
- Part No.: 33640

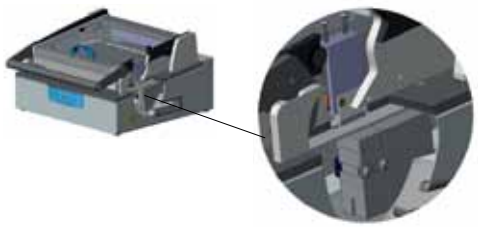

Safety Switch NO on ATS NDH Plate
- Part No.: 36210

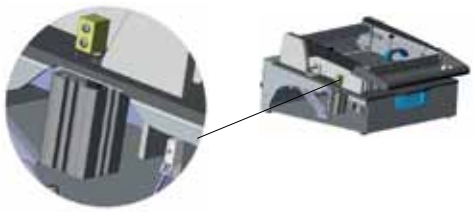

NDH not closable
- Part No.: 36230

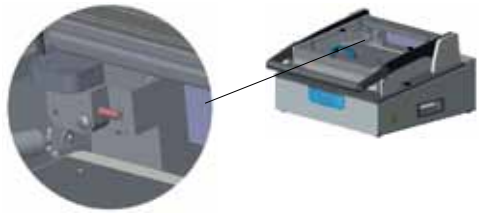

Safety Switch MG on NDH frame
- Part No.: 36265

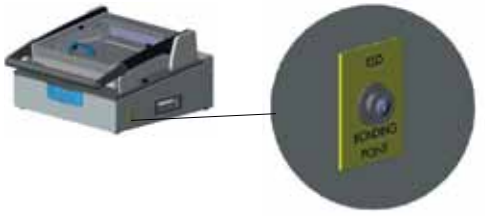

ESD Base Unit (DIN EN 61340-5-1)
- Part No.: 33482

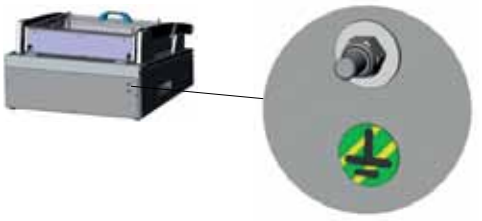

NSRL Base Unit (2006/95/EG)
- Part No.: 35270

Note:
Prices and lead-times of the new products for MA 21xx are available on request.

ingun

ingun Prüfmittelbau GmbH
Max-Stromeyer-Straße 162
78467 Konstanz
Germany
Tel. +49 7531 8105-0
Fax +49 7531 8105-65
info@ingun.com
www.ingun.com

All specifications are subject to change without prior notification